Testpassport Q&A

La meilleure qualité le meilleur service

http://www.testpassport.fr

Service de mise à jour gratuit pendant un an

Exam : **600-601**

Title : Managing Industrial Networks with Cisco Networking

Version : Demo

1.A small manufacturing company has a Class C network address on the plant floor and needs to create five subnets, each accommodating 25 endpoints.
Which subnet mask needs to be configured?
A. 255.255.240.0
B. 255.255.255.128
C. 255.255.255.192
D. 255.255.255.224
E. 255.255.255.240
F. 255.255.255.248
Answer: D

2.Refer to the exhibit.

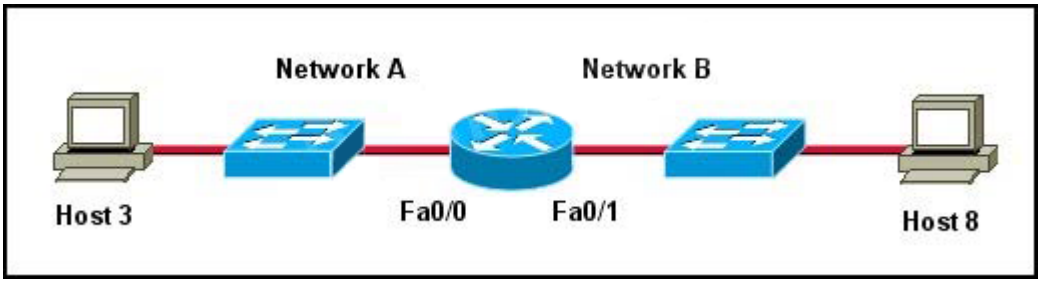

Host 3 on Network A is sending data to Host 8 on Network B.
Which address is the default gateway of Host 3?
A. the address of the switch interface that is connected to router interface Fa0/0
B. the address of the switch interface that is connected to router interface Fa0/1
C. the address of the host that is connected to Network A
D. the address of the host that is connected to Network B
E. the address of the router interface Fa0/0
F. the address of the router interface Fa0/1
Answer: E

3.Which of the following correctly pairs the dotted decimal subnet mask with the correct number of binary bits that represent the subnet mask?
A. 255.255.255.192 and /25
B. 255.255.255.248 and /28
C. 255.255.255.224 and /26
D. 255.255.255.248 and /27
E. 255.255.255.240 and /28
F. 255.255.255.240 and /16
Answer: E

4.Refer to the exhibit.

```
interface FastEthernet1/1
 switchport access vlan 102
!
interface FastEthernet1/2
 switchport access vlan 104
!
interface FastEthernet1/3
 switchport access vlan 103
!
interface FastEthernet1/4
 switchport access vlan 101
!
interface FastEthernet1/5
 switchport trunk native vlan 103
 switchport mode trunk
!
interface Vlan1
 no ip address
!
interface Vlan101
 ip address 192.168.1.1 255.255.255.0
 cip enable
!
interface Vlan102
 ip address 192.168.2.1 255.255.255.0
 cip enable
!
interface Vlan103
 ip address 192.168.3.1 255.255.255.128
 cip enable
!
interface Vlan104
 ip address 192.168.3.129 255.255.255.128
 cip enable
!
ip classless
```

Which port should a PLC with IP address 192.168.3.65 be plugged into in order to communicate to the rest of the network?

A. FastEthernet1/1
B. FastEthernet1/2
C. FastEthernet1/3
D. FastEthernet1/4
E. FastEthernet1/5

Answer: C

5.Which option allows an EtherNet/IP I/O device to be safely installed where it is subject to water immersion?

A. The device is rated IP20 and the power wiring is installed securely to the terminal block.
B. The device is rated IP67 and a power cordset is used.
C. The device is rated IP67 and immersed to 10 m.
D. The device is rated IP20 and immersed to 10 m.

Answer: B

6.Refer to the exhibit.

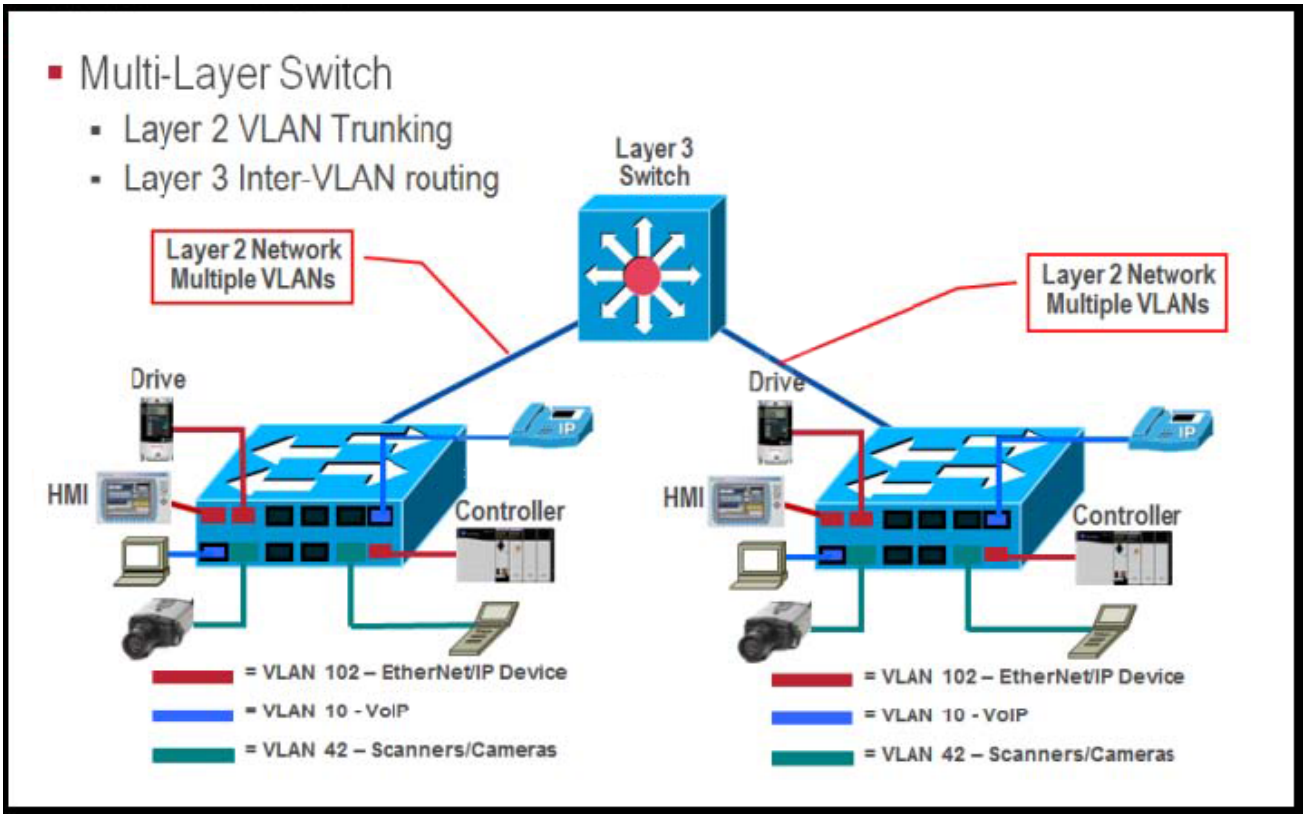

What are three traffic and interconnection requirements for the devices in the exhibit? (Choose three.)

A. The EtherNet/IP drive connections are in a high-voltage area and need protection from electromagnetic noise, so shielded cable that is rated for 600 V is advised.

B. EtherNet/IP devices such as the controller, drive, VoIP phone, and IP camera should be in the same VLAN.

C. CIP traffic has the highest bandwidth requirement so it needs the highest QoS setting.

D. EtherNet/IP drive traffic has high sensitivity to random drops, latency, and jitter.

E. Real-time motion control and VoIP traffic can share the same VLAN with the proper QoS setting.

F. IEEE1588 and PTP are important for ensuring real-time synchronization.

Answer: A,D,F

7.Exhibit:

Which two statements are correct for a safe wiring installation to the terminal block of the switch or endpoint? (Choose two.)

A. Insert a green ground wire into the terminal block that is marked RT for return.

B. Verify that DC power is live and within 24 VDC voltage range before starting wiring.
C. Verify that the DC power circuit includes an overcurrent protective device that limits the DC current to 5 A.
D. Because this is a low-voltage DC circuit, anyone can install this wiring without electrical training or qualifications.
E. Connect the positive 24 VDC conductor to the V terminal and connect the negative 24 VDC return wire to the RT terminal.
F. A ground wire can optionally be connected to the screw terminal on the front of the switch.
Answer: C, E

8.What are two benefits of a star network topology? (Choose two.)
A. Disruption of the entire network is not required when adding new machines.
B. Any problem which leaves the network inoperable can be traced to the central hub.
C. This network type requires less cable as compared to linear bus topology.
D. The performance of one of the numerous nodes cannot reflect on the performance of other nodes.
E. The performance of the entire network is directly dependent on the performance of the hub.
Answer: A, B

9.Which three of the following components must be elected before the Spanning Tree Protocol can converge in a switched LAN? (Choose three.)
A. designated ports
B. duplex operating mode
C. fast mode ports
D. root bridge
E. root ports
F. BDPU priority
Answer: A,D,E

10.What is the purpose of Spanning Tree Protocol?
A. to prevent routing loops
B. to create a default route
C. to provide multiple gateways for hosts
D. to maintain a loop-free Layer 2 network topology
E. to enhance the functions of SNMP
Answer: D