Testpassport Q&A

La meilleure qualité le meilleur service

http://www.testpassport.fr

Service de mise à jour gratuit pendant un an

Exam : **642-052**

Title : Routing and Switching SE/FE

Version : DEMO

1.What is the purpose of the dialer-list command when configuring a router to initiate a dial-on-demand routing ISDN call?

A.It defines call destination parameters.

B.It defines what constitutes interesting traffic.

C.It provides for optional call parameters.

D.It assigns a dialer-group to an interface.

Correct:B

2.What are three disadvantages of a router-on-a-stick configuration for InterVLAN routing? (Choose three.)

A.InterVLAN routing cannot be filtered by the router.

B.The router becomes a single point of failure for the network.

C.Routers will not route STP BPDUs.

D.There is a possibility of inadequate bandwidth for each VLAN.

E.Additional overhead on the router can occur.

F.NetFlow Switching is required for InterVLAN accounting.

Correct:B D E

3.What are two purposes of the ACL sub-command in the crypto isakmp client configuration group {group-name | default\} command? (Choose two.)

A.enables split tunneling

B.disables split tunneling

C.indicates the protected range

D.indicates the unprotected range

Correct:A C

4.Which two routers support the use of Etherswitch modules and provide power to IP phones with the use of an external power supply? (Choose two.)

A.Cisco 2650

B.Cisco 2691

C.Cisco 3725

D.Cisco 3745

Correct:A B

5.You have been asked to provide a router with thirty 10/100 Ethernet interfaces and room for more for future growth. The router must also provide security in the form of firewalls for each Ethernet interface.Which router should you install?

A.Cisco 7206

B.Cisco 7304

C.Cisco 7513

D.Cisco 7603

Correct:D

6.What does the Cisco 3725 have?

A.2 network module slots, 3 VWIC slots, and 2 AIM slots

B.1 network module slot, 3 VWIC slots, and 2 AIM slots

C.3 network module slots, 2 VWIC slots, and 2 AIM slots

D.2 network module slots, 3 VWIC slots, and 3 AIM slots

Correct:A

7.Which QoS technique avoids the problems that occur when tail drop is used as the congestion avoidance mechanism on the router?

A.RSVP

B.WRED

C.CAR

D.CBWFQ

Correct:B

8.Which command displays the number of successful and failed calls?

A.show dialer

B.show interface

C.show isdn q931

D.show isdn active call

Correct:A

9.Which technology allows a service provider to support overlapping customer VLAN IDs over transparent LAN services?

A.802.1q tunneling

B.ATM

C.SDH

D.IP+Optical

Correct:A

10.Which implementation of SPAN is designed to support source ports, source VLANs, and destination ports across different switches?

A.RVSPAN

B.MSPAN

C.VSPAN

D.RSPAN

Correct:D

11.Given the configuration:access-list 101 permit ip any anyaccess-list 101 deny tcp any any eq ftpdialer-list 2 protocol ip list 101Which two statements about the configuration are true with respect to FTP traffic and DDR? (Choose two.)

A.FTP traffic will be forwarded.

B.FTP traffic will not be forwarded.

C.FTP will cause the line to come up.

D.Since FTP uses two sockets, both must be defined to prevent packet forwarding.

Correct:A C

12.Which three statements are correct with regard to the IEEE 802.1Q standard? (Choose three.)

A.the packet is encapsulated with a 26 byte header and a 4 byte FCS

B.the IEEE 802.1Q frame format adds a 4 byte field to a Ethernet frame

C.the IEEE 802.1Q frame retains the original MAC destination address

D.the IEEE 802.1Q frame uses multicast destination of 0x01-00-0c-00-00

E.protocol uses point-to-point connectivity

F.protocol uses point-to-multipoint connectivity

Correct:B C E

13.What feature of the EZ VPN Remote makes it desirable to have Proxy DNS server support for

the PCs attached to the VPN?

A.Client mode with connect auto

B.Client mode with connect manual

C.Network Extension mode with connect auto

D.Network Extension mode with connect manual

Correct:B

14.Drag Drop question

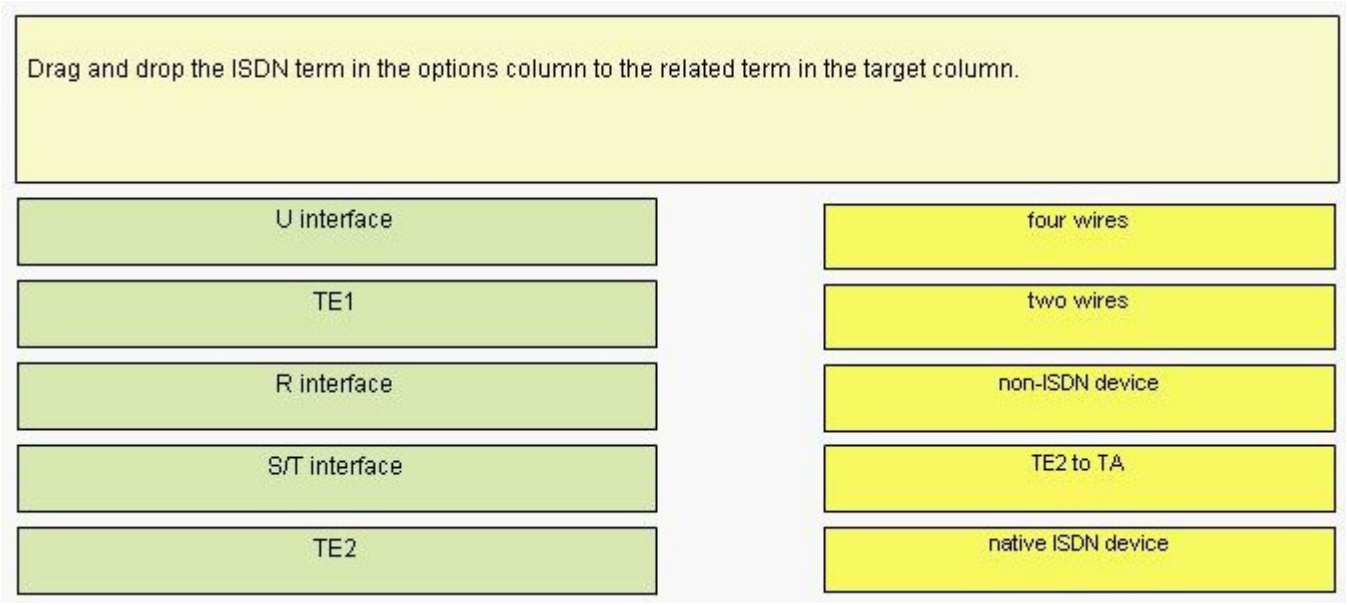

Correct:

Green choice4---->Yellow Choice1

Green choice1---->Yellow Choice2

Green choice5---->Yellow Choice3

Green choice3---->Yellow Choice4

Green choice2---->Yellow Choice5

15.What is the default action of authentication when AAA is enabled but authentication is not set?

A.Allow a user to access all resources after login.

B.Disallow a user from access to all resources after login.

C.Record all access of resources and who long the user accessed each resources.

D.Not to record any access of resources the users accessed after login.

E.Allow any user to login without checking the authentication database.

F.Disallow any user from logging in with or without a valid username and password.

Correct:F

16.Which two commands assign multiple ISDN BRI interfaces to a single hunt group? (Choose two.)

A.dialer-group

B.multilink ppp

C.interface dialer

D.dialer hunt-group

E.dialer rotary-group

Correct:C E

17.What is a primary difference between PPPoA and either PPPoE or RFC 1483 Bridge encapsulation methods?

A.PPPoA requires host-based client software to provide connectivity and authentication.

B.PPPoA does not support session authentication with the aggregation router.

C.PPPoA is routed end-to-end from the user's PC (or local router) over ATM to the aggregation router.

D.PPPoA provides simple bridged connections for an unlimited amount of hosts.

Correct:C

18.Which command verifies Frame Relay traffic-shaping parameters?

A.show frame-relay pvc

B.show frame-relay status

C.show frame-relay interface

D.show frame-relay map-class

Correct:A

19.From the figure, which frame-relay map command would configure a static address mapping from the central site to the branch site?

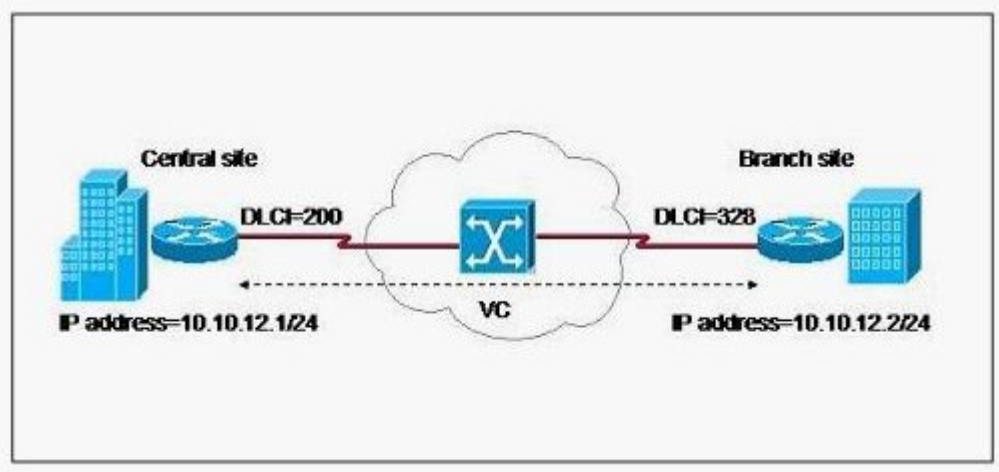

A.frame-relay map ip 10.10.12.2 328 broadcast ietf

B.frame-relay map ip 10.10.12.2 200 broadcast cisco

C.frame-relay map ip 10.10.12.1 200 broadcast cisco

D.frame-relay map ip 10.10.12.1 328 broadcast ietf

Correct:B

20.How does a Layer 2 switch handle multicast traffic, by default?

A.It blocks multicast traffic on all ports.

B.It delivers multicast traffic to all ports.

C.It delivers multicast traffic only to ports that subscribe to it.

D.It delivers multicast traffic only to clients that are a member of a multicast group.

Correct:B