Testpassport Q&A

La meilleure qualité le meilleur service

http://www.testpassport.fr

Service de mise à jour gratuit pendant un an

Exam : **642-383**

Title : Cisco Express Foundation for Field Engineers

Version : Demo

1. Refer to the exhibit. The Cisco Aironet 802.11a/b/g Wireless LAN Client Adapter has two LEDs. Which two LED states indicate that the card is associated to an access point and is working properly? (Choose two.)
Select 2 response(s).

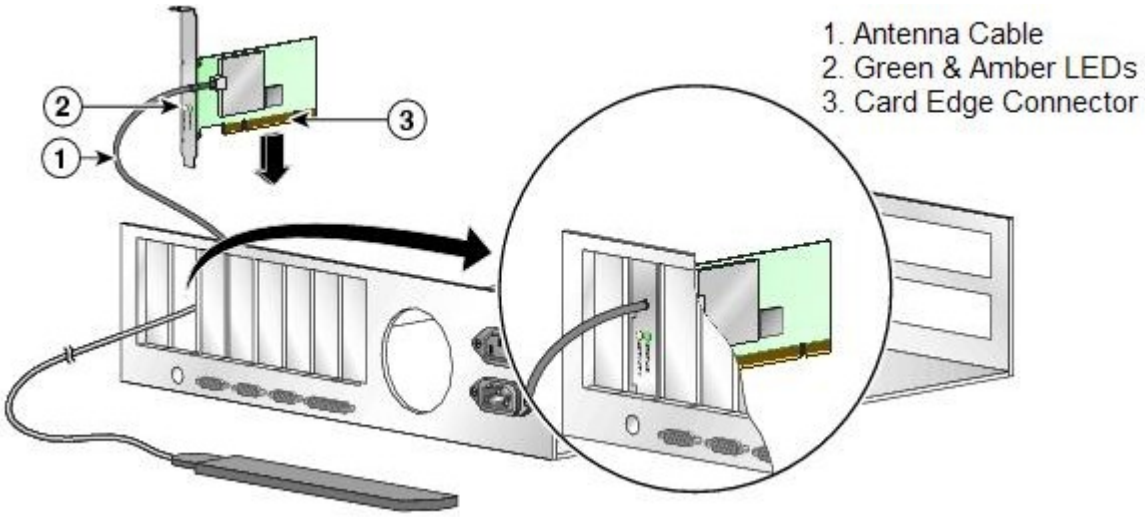

A. green LED off; amber LED solid
B. green LED off; amber LED blinking sporadically
C. green LED blinking quickly; amber LED blinking quickly
D. green LED blinking slowly; amber LED blinking slowly
E. green LED blinking slowly; amber LED blinking quickly
Answer: CD

2. A user is unable to connect to the Cisco Router and Security Device Manager via HTTPS. Which two of these might have caused this problem? (Choose two.)
Select 2 response(s).
A. The ip https server command is missing from the running configuration.
B. The ip http secure-server command is missing from the running configuration.
C. The user is trying to launch Cisco Router and Security Device Manager from the inside (secured) interface with a firewall enabled.
D. The user has a privilege level lower than 15.
E. The browser security level is set too high.
Answer: BD

3. Refer to the exhibit. The tables contain information from the Cisco Router and Security Device Manager configurations of Router A and Router B. Traffic between Host 1 and Host 2 is not successfully establishing the site-to-site VPN between Router A and Router B.

What is the mostly likely cause of this fault?
Select the best response.

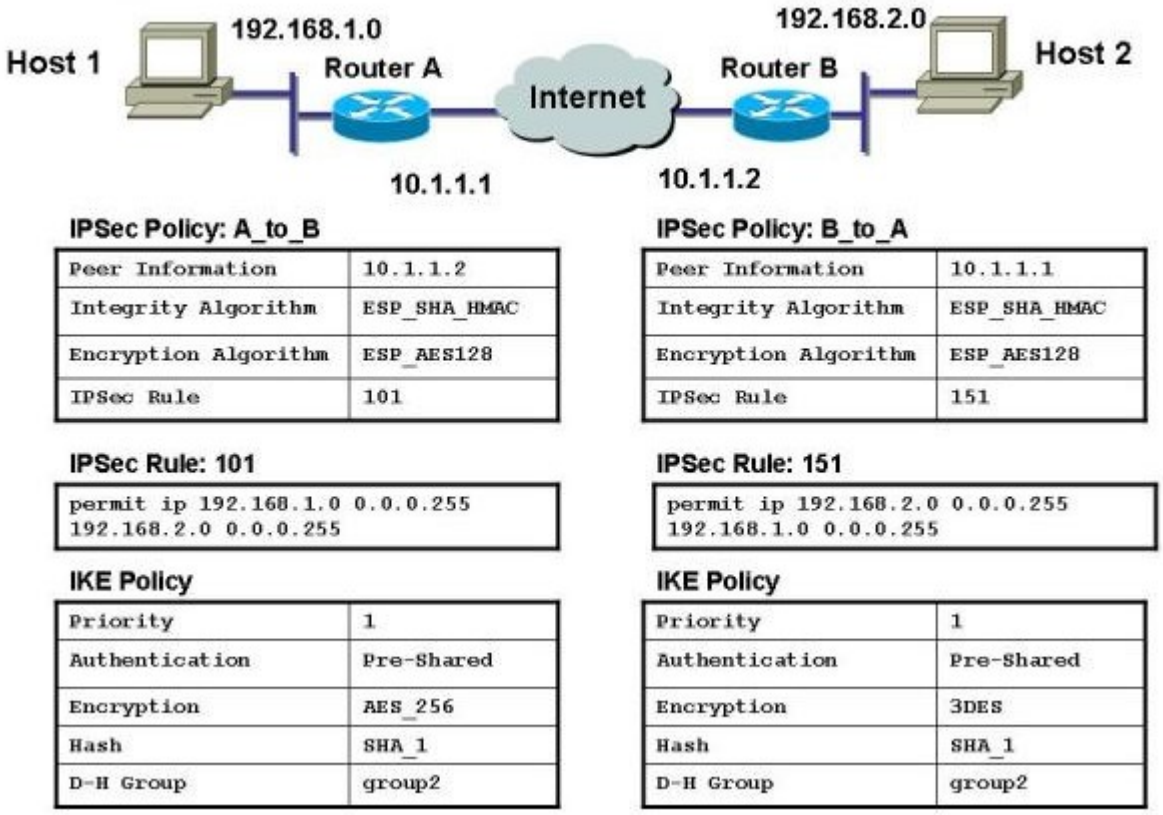

A. Router A is using a standard IP ACL (100-149) while Router B is using a Turbo ACL (150199).
B. The IKE encryption methods on the two routers are different.
C. The IPSec policy map names on the two routers are different.
D. The IPSec rules on the two routers are not permitting the correct interesting traffic.
Answer: B

4. Refer to the exhibit. A host on the Sales subnet (10.0.2.0/24) is not able to initiate a web connection to an outside website. According to the network diagram and partial Cisco Adaptive Security Device Manager configuration shown in the exhibit, what is the cause of the problem?

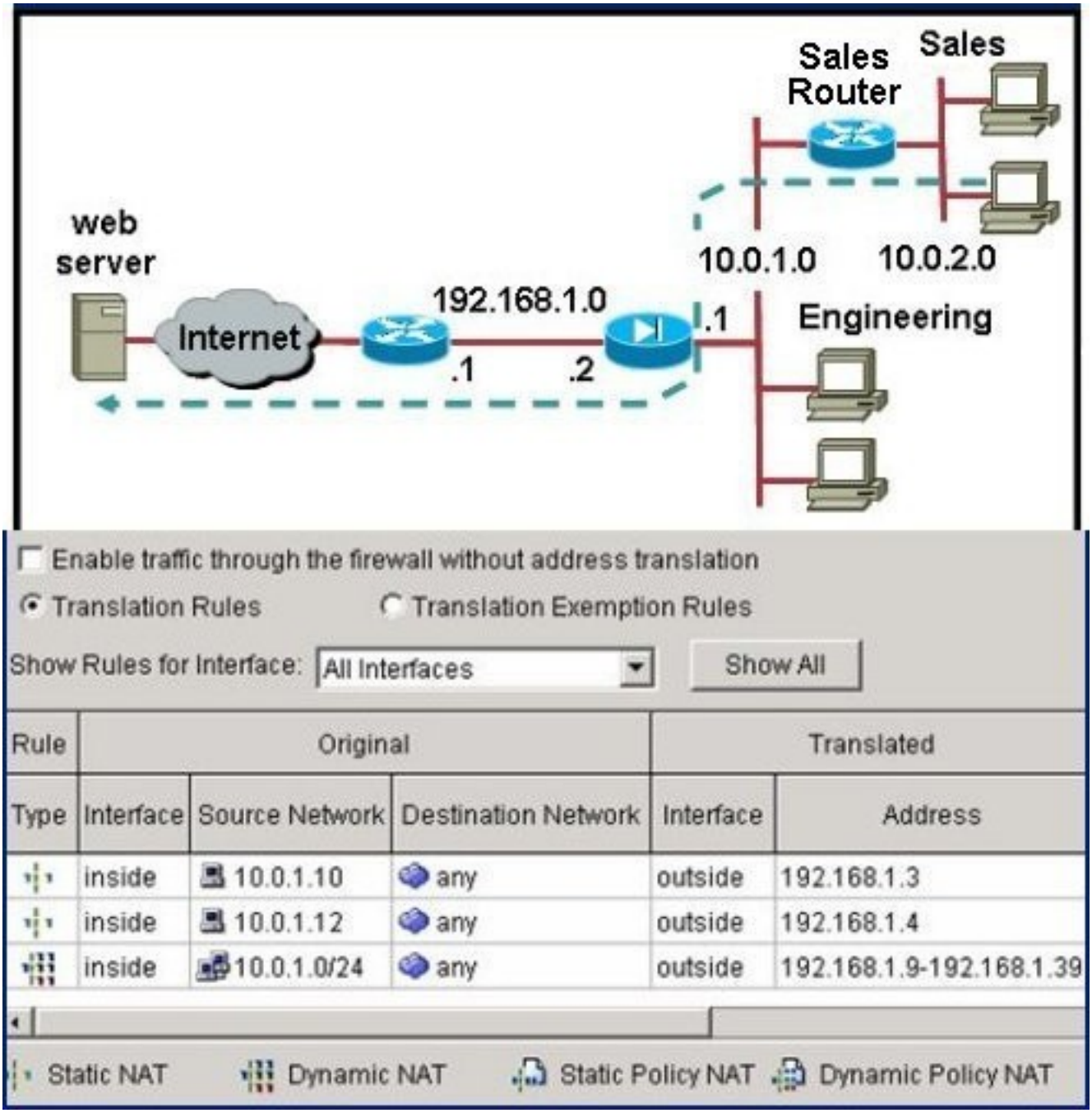

Select the best response.

A. The dynamic NAT global pool is not configured correctly.

B. The source networks for static NAT are not configured correctly.

C. The administrator has not added an access list to allow the connection.

D. The source network for dynamic NAT is not configured correctly.

Answer: D

5. Users logging into Cisco Router and Security Device Manager should be authenticated using the Cisco ISR local user database. Currently, none of the users can access Cisco Router and Security Device Manager via HTTP. You should check the configuration of which command or commands when attempting to resolve this problem?

Select the best response.
A. ip http secure-server
B. ip http authentication local
C. line vty 0 5
login local
D. aaa new-model
aaa authentication login default local
Answer: B

6. You are troubleshooting OSPF neighbor establishment problems, which are occurring over Frame Relay interfaces that use the default OSPF network type. What should you verify in the router configuration?
Select the best response.
A. the ip ospf network point-to-point statement under the Frame Relay interface
B. the ip ospf priority 0 statement on the Frame Relay interface on the designated router
C. the neighbor statements on the Frame Relay interface
D. the frame-relay map statement on the Frame Relay interface
Answer: D

7. Which critical issue should you account for when implementing an integrated network security management design?
Select the best response.
A. NAT interoperates with encrypted voice traffic
B. host-based intrusion detection systems reside in the network
C. all network devices are time-synchronized
D. SNMP community read-write strings are configured to allow for total management access
Answer: C

8. You are configuring a VLAN and the switch you are using requires that you do so within the VLAN database. Which command allows you to enter the VLAN database?
Select the best response.
A. Switch# vlan database
B. Switch(config)# vlan database
C. Switch(config-if)# vlan database
D. Switch(vlan)# vlan database
Answer: A

9. Which command assigns a cost value of "17" to a switch port?
Select the best response.
A. spanning-tree interface fastethernet 5/8 17
B. spanning-tree portcost 17
C. spanning-tree port cost 17
D. spanning-tree vlan 1 cost 17
Answer: D

10. In what location is it recommended that the Cisco Catalyst 6500 Series WLSM be placed? Select the best response.

A. distribution layer

B. core layer

C. access layer

D. network management functional module

Answer: A