Testpassport Q&A

La meilleure qualité le meilleur service

http://www.testpassport.fr

Service de mise à jour gratuit pendant un an

Exam : **E22-315**

Title : Disk Library and Backup to Disk Technologies

Version : DEMO

1. What does N_Port ID Virtualization (NPIV) functionality provide to a DL4200?

A.Disk library failover on a multilibrary configuration in a switched fabric environment

B.Disk library failover on a multilibrary configuration in an arbitrated loop environment

C.Engine failover on a multinode configuration in a switched fabric environment

D.Engine failover on a multinode configuration in an arbitrated loop environment

Answer: C

2. Click the Exhibit button.

A customer has a DL4200 connected to two switches in the same fabric, as shown in the exhibit. Windows Backup Server X is zoned to port 1 on Engine A and Windows Backup Server Y is zoned to port 7 on Engine B. Active Engine Failover has been configured and is active.

Both backup servers are performing backups at the same time to their respective engines. Engine A has a failure and all virtual services fail over to Engine B.

The backup administrator has verified that failover has occurred as expected but Backup X is unable to see its virtual resources through the surviving engine even after rescanning the SCSI bus.

What is the problem?

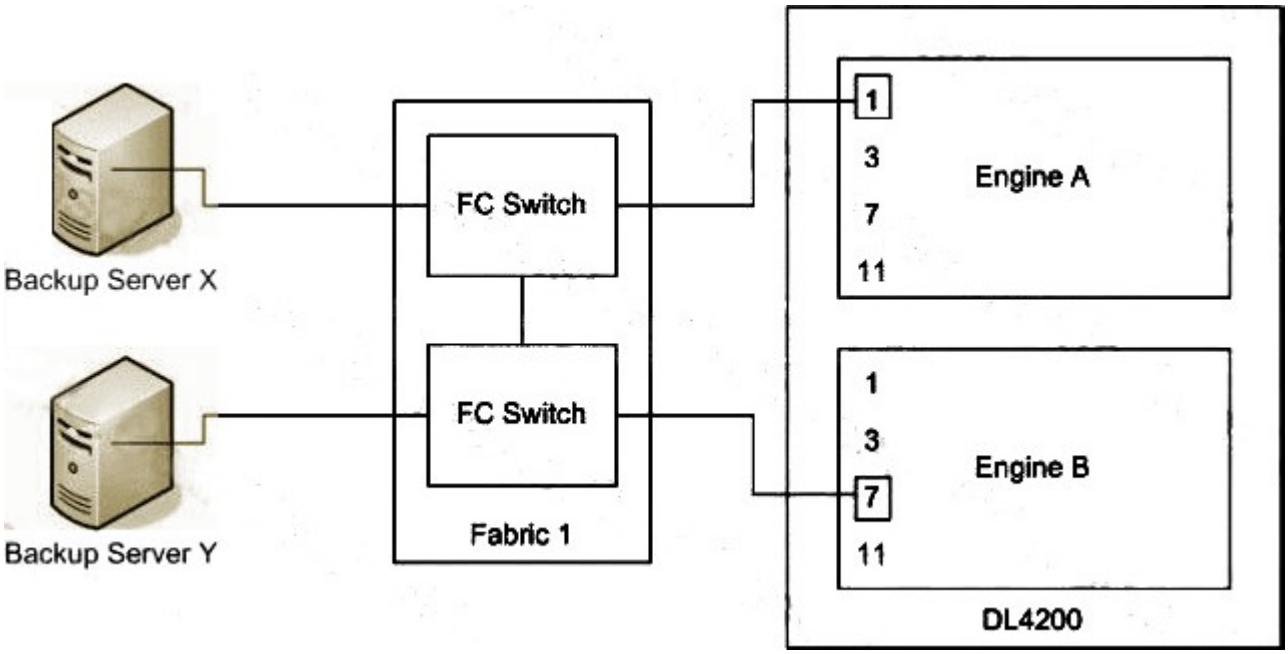

A.Engine to switch cabling is incorrect

B.Engines are connected to different switches

C.Lack of PowerPath configuration on the backup servers

D.Missing EMC NetWorker DL-Failover license

Answer: A

3. What should be used to configure and manage the EMC Disk Library?

A.EMC ControlCenter for EMC Disk Library

B.EMC Disk Library Console software

C.EMC Disk Library Navisphere software

D.Management is integrated with the backup application

Answer: B

4. An EMC NetWorker customer is using a file type device for backup-to-disk. What will happen if the file type device fills up?

A.Save is suspended and expired save sets on the volume are deleted

B.The device expands automatically and the save operation continues

C.The save operation is aborted and a new volume is selected for writing

D.The volume is marked full and save continues on a new volume

Answer: D

5. What is the recommended configuration for a Celerra ATA disk-array enclosure that will be used as a backup-to-disk target?

A.RAID 3 4+1

B.RAID 3 7+1

C.RAID 5 4+1

D.RAID 5 7+1

Answer: C

6. A customer with a Linux backup server plans to use a CLARiiON as the target for backups. What should be recommended for adequate I/O performance?

A.Set the read cache to the maximum limit

B.Set the storage element to 256 KB

C.Use a cache page size of 64 KB

D.Use fdisk to correct disk misalignment

Answer: D

7. Which type of connectivity is required from the backup host to the EMC Disk Library?

A.CIFS

B.Fibre Channel

C.Internet Protocol

D.NFS

Answer: B

8. Which type of connectivity is required from a backup host to the EMC Disk Library?

A.Copper Network

B.Ethernet NAS

C.Fibre Channel

D.IP NAS

Answer: C

9. Where can an EMC Disk Library provide the best value to a customer?

A.Backup and restore speed, capacity, and reliability

B.Portability, investment protection, and TCO/ROI

C.Recovery speed, ease of use, and company reputation

D.Reliability, ease of use, and portability

Answer: A

10. Where can an EMC Disk Library provide the best value to a customer?

A.Backup and restore speed, capacity, and reliability

B.Investment protection, space issues, and portability

C.Portability, recovery speed, and ease of use

D.TCO/ROI, company reputation, and investment protection

Answer: A

11. A customer wants to implement a solution that would allow maximum availability for backups to complete. Which EMC Disk Library feature will provide maximum availability for their backup solution?

A.Active Engine Failover

B.Backup Engine Failover

C.CLARiiON Engine Failover

D.Passive Engine Failover

Answer: A

12. A customer wants to implement one EMC Disk Library in the primary data center and one EMC Disk Library in the remote data center. What is the recommended feature to use to provide backup application catalog consistency between two data centers?

A.ACSLS

B.Active Engine Failover

C.Consolidated Media Management

D.Remote copy

Answer: C

13. A customer wants to implement one EMC Disk Library at their primary data center and one EMC Disk Library at their disaster recovery site with IBM Tivoli Storage Manager (TSM) as the backup application. A small subset of the primary data needs to be transferred to a disaster recovery site where it will eventually expire without TSM involvement.

What is a recommended feature to use with EMC Disk Library to transfer data to the disaster recovery site?

A.Active Tape Migrator

B.Compression

C.Remote Copy

D.Tape Capacity-on-Demand

Answer: C

14. What are the major components of an EMC Disk Library?

A.EMC disk drives, EMC Disk Library solutions, and EMC Disk Library services

B.EMC Disk Library appliance, EMC Disk Library, CLARiiON, and EMC Disk Library server

C.EMC Disk Library, EMC Disk Library client, and EMC Disk Library Console

D.EMC Disk Library, EMC Tape Library, and EMC Disk Library server

Answer: C

15. How do the EMC Disk Library DL4x06 models provide improved data availability and resiliency?

A.1 TB hard drives

B.Active Engine Failover

C.Compression

D.RAID 6

Answer: D

16. How do the EMC Disk Library DL4x06 models provide improved data availability and resiliency?

A.1 TB hard drives

B.Active Engine Failover

C.Hardware compression

D.RAID 6

Answer: D

17. In order to increase effective usable capacity on an EMC Disk Library, which feature is available?

A.Active Engine Failover

B.Auto Archive

C.Consolidated Media Management

D.Virtual Tape Library Compression

Answer: D

18. Which EMC Disk Library feature allows export to physical tape media?

A.Auto Archive

B.Direct Access

C.Duplication

D.Remote copy

Answer: A

19. Which EMC Disk Library feature allows export to physical tape media?

A.Advanced Copy

B.Auto Archive

C.Remote copy

D.Tape Migration

Answer: B

20. Which EMC Disk Library models support ACSLS?

A.DL210, DL4100, DL4106

B.DL4100, DL4106, DL6100

C.DL4106, DL210, DL6100

D.DL6100, DL210, DL4100

Answer: B