Testpassport Q&A

La meilleure qualité le meilleur service

http://www.testpassport.fr

Service de mise à jour gratuit pendant un an

Exam : **JN0-643**

Title : Enterprise Routing and Switching, Professional (JNCIP-ENT)

Version : Demo

1.Which connection method do OSPF routers use to communicate with each other?
A. IP protocol number 89
B. TCP port 179
C. UDP port 179
D. IP protocol number 6
Answer: C

2.Which statement is true about default BGP route redistribution behavior?
A. IBGP-learned routes are advertised only to other IBGP peers.
B. EBGP-learned routes are redistributed into any IGPs.
C. EBGP-learned routes are advertised only to other EBGP peers.
D. EBGP-learned routes are advertised to other IBGP and EBGP peers.
Answer: B

3.In a PIM-SM network, which type of node helps to build a tree towards an unknown multicast source?
A. DIS
B. RP
C. DR
D. BSR
Answer: A

4.Which statement is true about MVRP?
A. It allows you to split a broadcast domain into multiple isolated broadcast subdomains.
B. It dynamically manages VLAN registration in a LAN.
C. It maps multiple independent spanning-tree instances onto one physical topology.
D. It is a Layer 2 protocol that facilitates network and neighbor discovery.
Answer: A

5.Which statement is true about LLDP?
A. It allows you to split a broadcast domain into multiple isolated broadcast subdomains.
B. It dynamically manages VLAN registration in a LAN.
C. It maintains a separate spanning-tree instance for each VLAN.
D. It is a Layer 2 protocol that facilitates network and neighbor discovery.
Answer: C

6.Which CoS feature avoids congestion in a device by limiting traffic on ingress interfaces?
A. rewrite rule
B. scheduler
C. drop profile
D. policer
Answer: A

7.Click the Exhibit button.

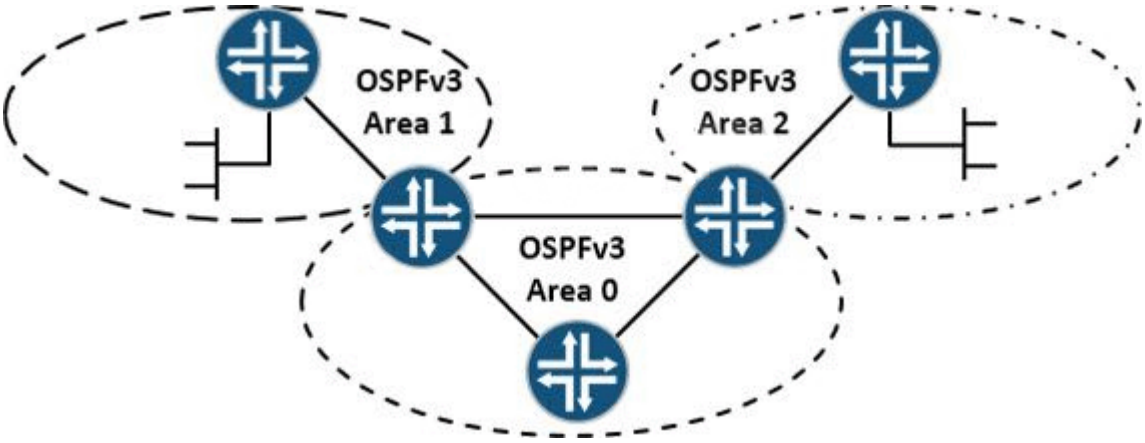

Which statement is true about the IPv6 network shown in the exhibit?
A. OSPFv2 must be configured to route IPv4 prefixes.
B. Areas 1 and 2 cannot be a stub or NSSA.
C. OSPFv3 can use MD5 authentication.
D. OSPFv3 can route IPv4 prefixes.
Answer: D

8.Click the Exhibit button.

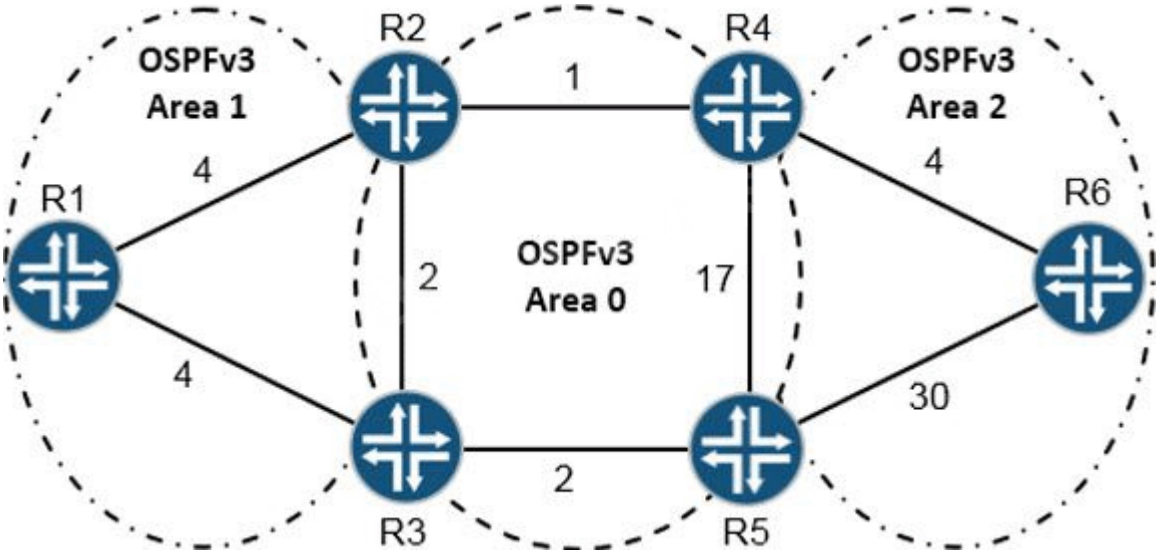

Referring to the exhibit, what is the shortest path from R6 to R5?
A. R6, R4, R2, R1, R3, R5
B. R6, R4, R2, R3, R5
C. R6, R4, R5
D. R6, R5
Answer: D

9.R1 and R2 are ASBRs in the same area, each with an equal cost external path to the same external network prefix. R1 advertises an external route into OSPF with a Type 1 metric. R2 advertises an external route into OSPF with a Type 2 metric.
Which route would be preferred?

A. R1's route is preferred because Type 1 metrics take into account the external cost only.
B. R1's route is preferred because Type 1 metrics take into account the internal and external cost.
C. R2's route is preferred because Type 2 metrics take into account the internal and external cost.
D. R2's route is preferred because Type 2 metrics take into account the external cost only.
Answer: D

10.Click the Exhibit button.

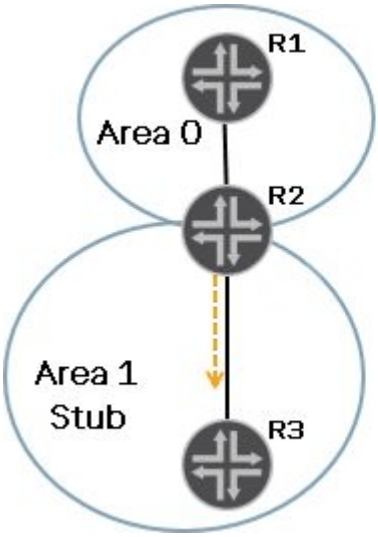


```
user@R2# show
area 0.0.0.1 {
    stub default-metric 10;
    interface ge-0/1/1.0;
}
```

Referring to the exhibit, which LSA type will Router R2 inject into Area 1?
A. Type 3 LSA
B. Type 4 LSA
C. Type 5 LSA
D. Type 7 LSA
Answer: A

11.Click the Exhibit button.

```
[edit protocols ospf]
user@R2# show
area 0.0.0.6 {
    nssa {
        default-lsa default-metric 10;
        area-range 184. 23. 12. 0/24;
        }
    interface ge-1/1/4;
}

[edit protocols ospf]
user@R2# show ospf database

    OSPF database, Area 0.0.0.0
 Type        ID            Adv Rtr        Seq          Age   Opt   Cksum   Len
Router     *192.168.0.2   192.168.0.2   0x80000004    749   0x22  0x87c2   60
```

Router	192.168.0.3	192.168.0.3	0x80000004	399	0x22	0x94b5	60
Summary	*10.0.0.0	192.168.0.2	0x80000003	19	0x22	0xe2e4	28
Summary	*192.168.0.1	192.168.0.2	0x80000002	1100	0x22	0xbda7	28

OSPF database, Area 0.0.0.6

Type	ID	Adv Rtr	Seq	Age	Opt	Cksum	Len
Router	192.168.0.1	192.168.0.1	0x80000004	404	0x20	0x76db	60
Router	*192.168.0.2	192.168.0.2	0x80000003	1802	0x20	0x319b	48
Summary	*11.0.0.0	192.168.0.2	0x80000002	2504	0x20	0xf5d3	28
Summary	*192.168.0.2	192.168.0.2	0x80000003	2153	0x20	0xc5a0	28
Summary	*192.168.0.3	192.168.0.2	0x80000002	398	0x20	0xc79d	28
NSSA	*0.0.0.0	192.168.0.2	0x80000001	11	0x20	0xcbf1	36
NSSA	184.23.12.0	192.168.0.1	0x80000002	447	0x28	0xb93f	36

OSPF AS SCOPE link state database

Type	ID	Adv Rtr	Seq	Age	Opt	Cksum	Len
Extern	*184.23.12.0	192.168.0.2	0x80000003	11	0x22	0x28d6	36

Referring to the exhibit, which two statements are correct? (Choose two.)

A. R2 injects a Type 3 LSA for 184.23.12.0/24 into the backbone.

B. R2 is an ABR.

C. R2 injects a Type 5 LSA for 184.23.12.0/24 into the backbone.

D. R2 is an ASBR.

Answer: B,C

12.Click the Exhibit button.

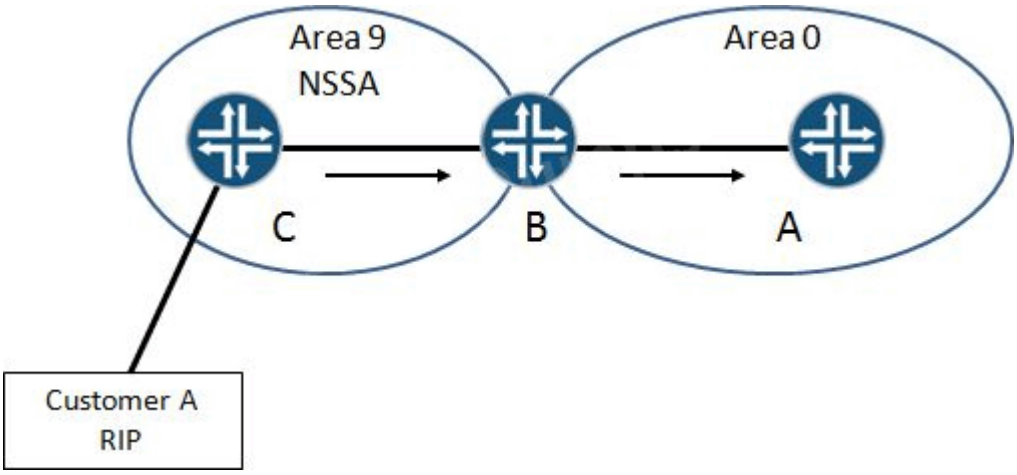

Referring to the exhibit, which type of LSA will be seen on router A for routes originating in Customer A's network?

A. Type 7 LSA

B. Type 2 LSA

C. Type 5 LSA

D. Type 1 LSA

Answer: C

13.Which statement is true regarding OSPF multi-area adjacencies?
A. A type 3 (stub) link is advertised for a multi-area adjacency.
B. Configuring a multi-area adjacency allows the corresponding link to be considered an interarea link, so it will be less preferred over an intra-area link.
C. One logical interface will be a primary link, and the other configured as a secondary link; the secondary link will be established as an unnumbered point-to-point interface.
D. A DR and a BDR will be elected over the secondary interface, because it is not point-to-point.
Answer: C

14.Click the Exhibit button.

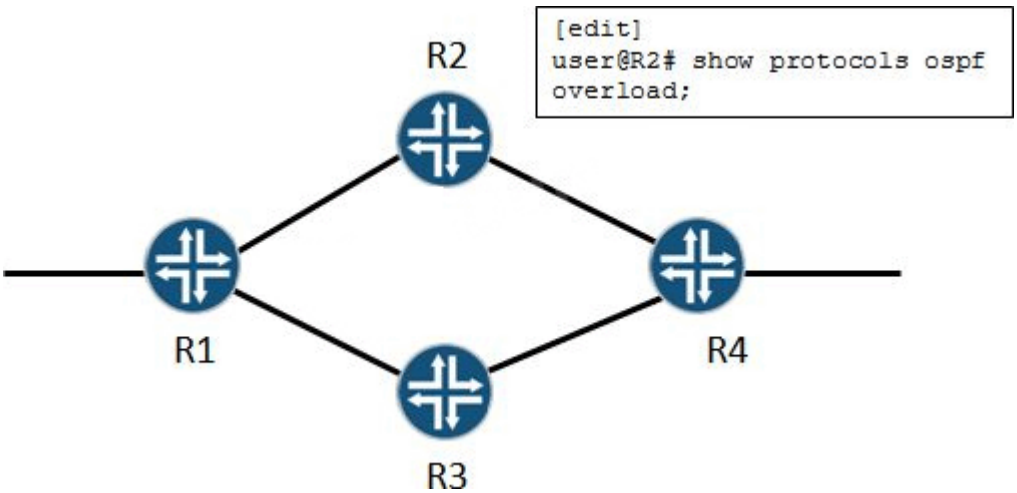

Referring to the exhibit, which two statements are correct? (Choose two.)
A. Traffic destined for R2 will be blackholed.
B. Transit traffic will follow the R1-R2-R4 path.
C. Traffic destined for R2 will reach R2.
D. Transit traffic will follow the R1-R3-R4 path.
Answer: C,D

15.Which statement is true about using an OSPF import policy?
A. Import policies are not allowed in OSPF, applying the policy will do nothing.
B. Applying an import policy to OSPF may block normal LSA flooding.
C. Import policies are allowed only for external route types.
D. Applying this policy will cause a commit failure.
Answer: C

16.Which statement is true regarding the SPF algorithm?
A. The SPF algorithm is run on a per-domain basis.
B. If you apply an import policy to OSPF, it keeps LSAs from being flooded, and the SPF calculation can be affected.
C. There are two databases used in the calculation, the link-state database and the tree database.
D. The SPF calculation is run on a per-area basis on each router.
Answer: D

17.You are asked to configure graceful restart in your network.
Which OSPF LSA type would you expect to see in the LSDB?
A. Type 8
B. Type 9
C. Type 10
D. Type 11
Answer: B

18.Click the Exhibit button.

```
[edit]
user@R1# show routing-options router-id
router-id 1.1.1.1;

[edit]
user@R1# show protocols ospf
area 0.0.0.0 {
    interface ge-0/0/1.0;
}

----------

[edit]
user@R2# show routing-options router-id
router-id 2.2.2.2;

[edit]
user@R2# show protocols ospf
area 0.0.0.0 {
    interface ge-0/0/1.0 {
        priority 200;
    }
}

----------

[edit]
user@R3# show routing-options router-id
router-id 128.250.250.250;

[edit]
user@R3# show protocols ospf
area 0.0.0.0 {
    interface ge-0/0/1.0;
}

----------

[edit]
user@R4# show routing-options router-id
router-id 220.220.220.220;

[edit]
user@R4# show protocols ospf
area 0.0.0.0 {
    interface ge-0/0/1.0 {
        priority 0;
    }
}
```

Referring to the exhibit, which answer is correct?

A. R2 is the DR and R1 is the BDR.

B. R4 is the DR and R2 is the BDR.

C. R2 is the DR and R3 is the BDR.

D. R3 is the DR and R2 is the BDR.

Answer: C

19.Click the Exhibit button.

```
 user@router> show ospf database network extensive
      OSPF link state database, area 0.0.0.1
 Type        ID          Adv Rtr          Seq          Age   Opt   Cksum   Len
Network   10.222.1.1   192.168.20.1    0x80000002    813   0x2    0x      32
   mask 255.255.255.0
   attached router 192.168.20.1
   attached router 192.168.40.1
   Aging timer 00:46:27
   Installed 00:13:32 ago, expires in 00:46:27, sent 1w5d 01:07:09 ago
```

Referring to the exhibit, which statement is true regarding the OSPF network LSA?

A. The ID field value shows the router ID of the advertising router.

B. The ID field is the local interface IP address from which the LSA will be advertised.

C. The options field indicates this is a Type 2 LSA.

D. The output shows that 192.168.20.1 is the designated router.

Answer: D

20.Click the Exhibit button.

```
user@router> show log ospf
Sep 19 00:22:13. 420315 OSPF packet ignored: MTU mismatch from 11.0.0.2 on intf ge-0/0/2.0 area
0.0.0.0
Sep 19 00:22:14. 475671 OSPF periodic xmit from 14.0.0.1 to 224.0.0.5 (IFL 75 area 0.0.0.0)
Sep 19 00:22:14. 855490 OSPF periodic xmit from 12.0.0.1 to 224.0.0.5 (IFL 84 area 0.0.0.0)
Sep 19 00:22:14. 857304 OSPF packet ignored: no matching interface from 12.0.0.1, IFL 85
Sep 19 00:22:17. 386726 OSPF packet ignored: MTU mismatch from 11.0.0.2 on intf ge-0/0/2. 0 area
0.0.0.0
Sep 19 00:22:20. 855690 OSPF packet ignored: subnet mismatch from 10.0.0.2 on intf ge-0/0/1.0 area
0.0.0.0
Sep 19 00:22:20. 856108 OSPF rcvd Hello 10.0.0.2 -> 224.0.0.5 (ge-0/0/1.0 IFL 75 area 0.0.0.0)
Sep 19 00:22:20. 856177     Version 2, length 44, ID 10.0.0.2, area 0.0.0.0
Sep 19 00:22:20. 856229     checksum 0x0, authtype 0
Sep 19 00:22:20. 856299     mask 255.255.255.252, hello_ivl 10, opts 0x12, prio 128
Sep 19 00:22:20. 856352     dead_ivl 40, DR 0.0.0.0, BDR 0.0.0.0
Sep 19 00:22:21. 752438 OSPF packet ignored: MTU mismatch from 11.0.0.2 on intf ge-0/0/2. 0 area
0.0.0.0
Sep 19 00:22:22. 013285 OSPF packet ignored: area mismatch (0.0.0.1) from 12.0.0.2 on intf ge-0/0/4.0
area 0.0.0.0
Sep 19 00:22:22. 013749 OSPF rcvd Hello 12.0.0.2 -> 224.0.0.5 (ge-0/0/4.0 IFL 84 area 0.0.0.0)
Sep 19 00:22:22. 013804     Version 2, length 44, ID 10.0.0.2, area 0.0.0.1
Sep 19 00:22:22. 013890     checksum 0xd51e, authtype 0
Sep 19 00:22:22. 013944     mask 255.255.255.252, hello_ivl 10, opts 0x12, prio 128
Sep 19 00:22:22. 014012     dead_ivl 40, DR 12.0.0.2, BDR 0.0.0.0
```

Sep 19 00:22:22. 016909 OSPF packet ignored: no matching interface from 12.0.0.2, IFL 85
Sep 19 00:22:22. 434956 OSPF hello from 11.0.0.2 (IFL 83, area 0.0.0.0) absorbed
Sep 19 00:22:23. 045916 OSPF periodic xmit from 12.0.0.1 to 224.0.0.5 (IFL 84 area 0.0.0.0)
Sep 19 00:22:23. 047959 OSPF packet ignored: no matching interface from 12.0.0.1, IFL 85
Sep 19 00:22:23. 309957 OSPF periodic xmit from 11.0.0.1 to 224.0.0.5 (IFL 83 area 0.0.0.0)
Sep 19 00:22:23. 528614 OSPF periodic xmit from 14.0.0.1 to 224.0.0.5 (IFL 75 area 0.0.0.0)
Sep 19 00:22:25. 772835 OSPF packet ignored: MTU mismatch from 11.0.0.2 on intf ge-0/0/2. 0 area 0.0.0.0
Sep 19 00:22:29. 950015 OSPF hello from 11.0.0.2 (IFL 83, area 0.0.0.0) absorbed
Sep 19 00:22:30. 622112 OSPF packet ignored: MTU mismatch from 11.0.0.2 on intf ge-0/0/2. 0 area 0.0.0.0
Sep 19 00:22:30. 713279 OSPF packet ignored: subnet mismatch from 10.0.0.2 on intf ge-0/0/1.0 area 0.0.0.0
Sep 19 00:22:30. 713432 OSPF rcvd Hello 10.0.0.2 -> 224.0.0.5 (ge-0/0/1.0 IFL 75 area 0.0.0.0)
Sep 19 00:22:30. 713503 Version 2, length 44, ID 10.0.0.2, area 0.0.0.0
Sep 19 00:22:30. 713553 checksum 0x0, authtype 0
Sep 19 00:22:30. 713622 mask 255.255.255.252, hello_ivl 10, opts 0x12, prio 128
Sep 19 00:22:30. 713677 dead_ivl 40, DR 0.0.0.0, BDR 0.0.0.0

Referring to the exhibit, what is preventing the OSPF adjacency on interface ge-0/0/4 from forming?

A. area mismatch
B. subnet mismatch
C. MTU mismatch
D. authentication mismatch

Answer: A