Testpassport Q&A

La meilleure qualité le meilleur service

http://www.testpassport.fr

Service de mise à jour gratuit pendant un an

Exam : JN0-663

Title : Service Provider Routing and Switching, Professional (JNCIP-SP)

Version : DEMO

1.Exhibit:

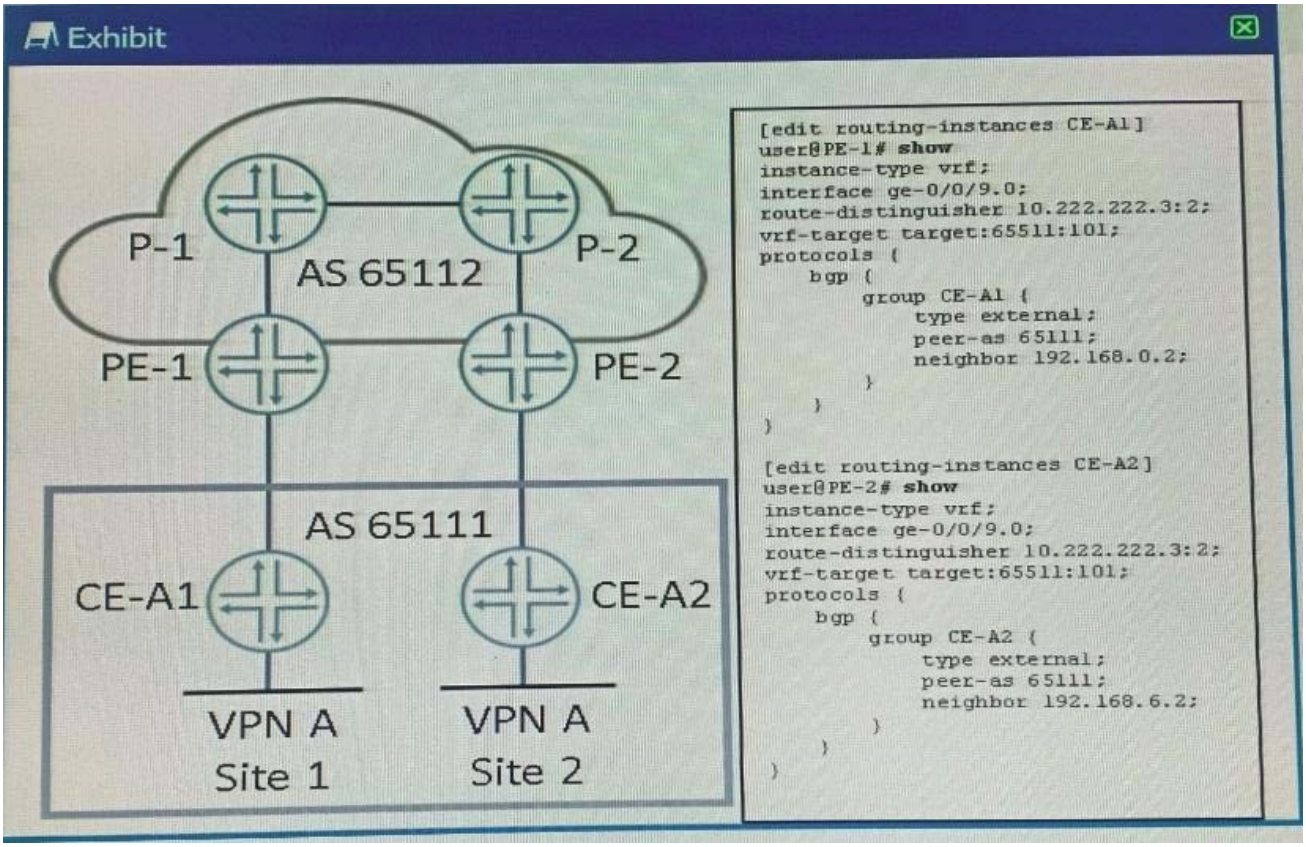

Referring to the exhibit, hosts in Site 1 and Site 2 are unable to communicate with each other through the Layer 3 VPN.

What is the problem?

A. The two sites are using the same route distinguishes.

B. The two sites are in the same AS.

C. The two sites are using the same instance type.

D. The two sites are using the same route target.

Answer: B

2.Which two statements regarding Ethernet segments (ES) are correct? (Choose two)

A. The Type-1 EVPN route will indicate if the ES is all-active or single-active.

B. The Type-4 EVPN route will be used to elect the designated forwarder for the ES.

C. The Type-2 EVPN route will indicate if there is a designated forwarder on the ES.

D. The Type-3 EVPN route will be used for the aliasing function to load-balance to the ES

Answer: A,C

3.Exhibit.

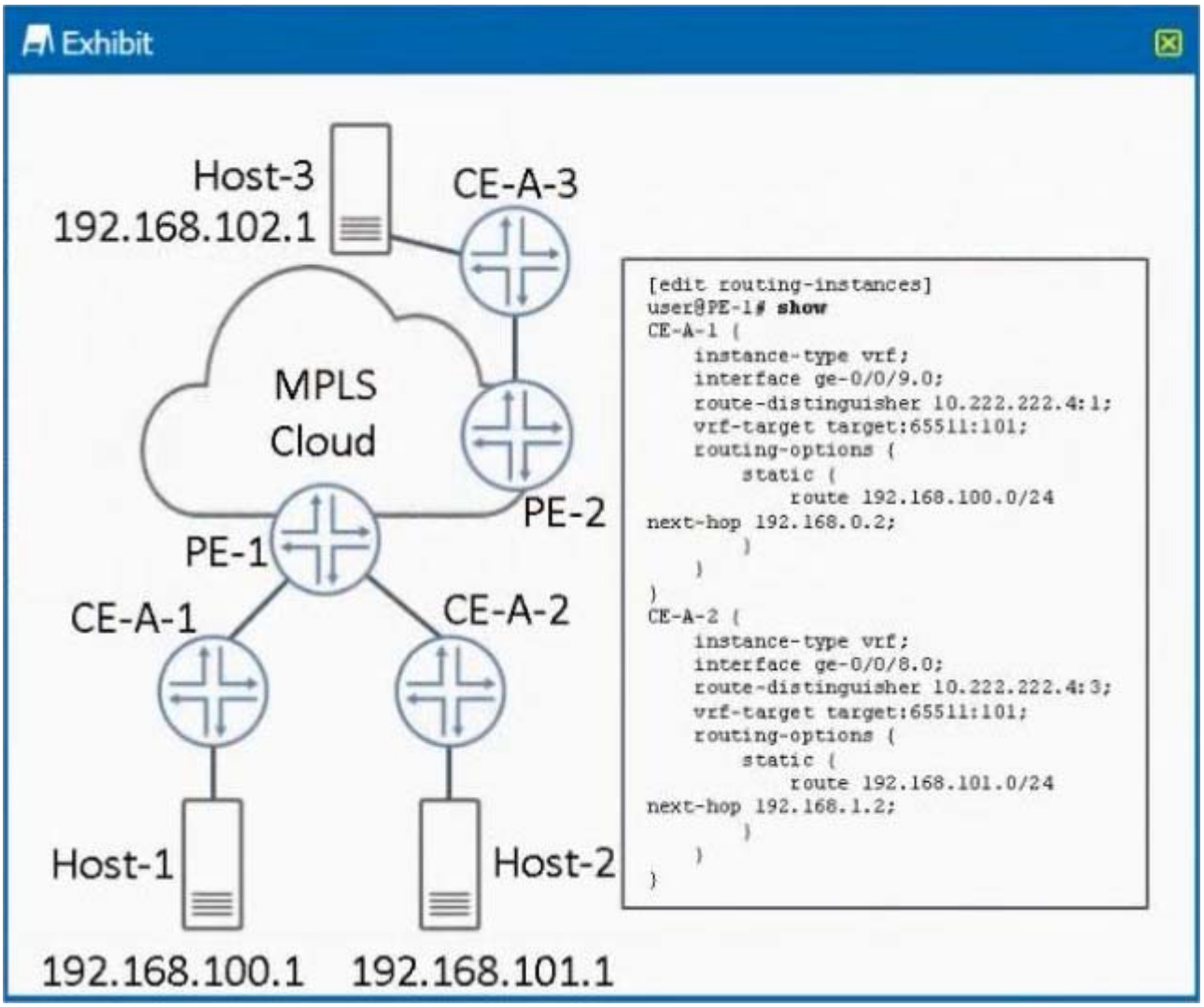

Referring to the exhibit, there is an Layer 3 VPN setup that connects sites CE-A-1. CE-A-2 and CE-A-3 together Host-1 can communicate with Host-3. but Host-1 cannot communicate with Host-2

What must you do to solve the problem?

A. Use the auto-export command in both routing instances

B. Change the route distinguish^ in both routing instances to the same value

C. Use the next-table configuration statement for static routes in the corresponding routing instances.

D. Use BGP instead of static routing between the CE and PE devices

Answer: A

4.Exhibit:

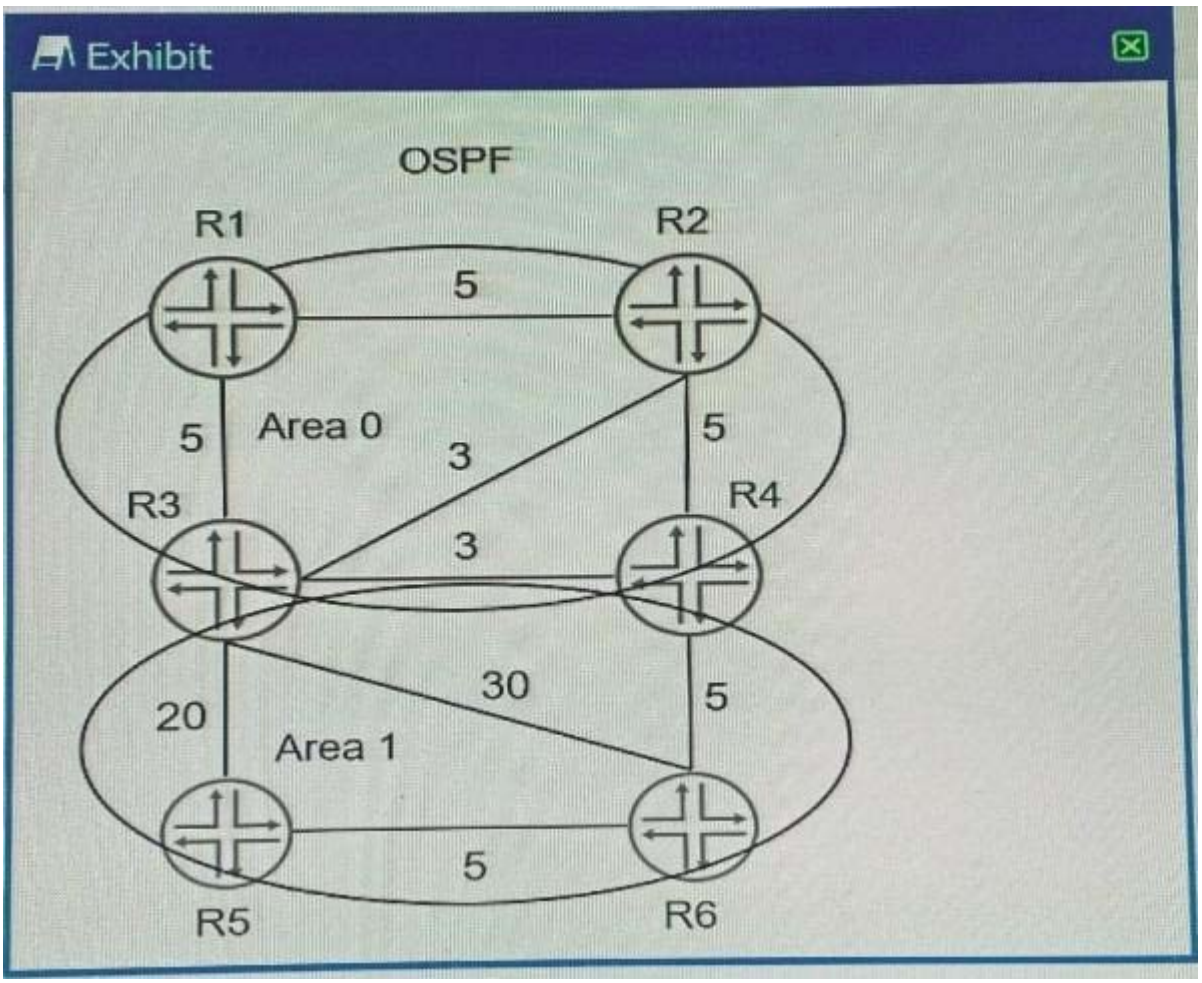

Referring to the exhibit, which path would traffic passing through R1 take to get.

A. R1 -> R2 -> R4 -> R6

B. R1 -> R2 -> R3 -> R6

C. R1 -> R3 -> R5 -> R6

D. R1 -> R3 -> R4 -> R6

Answer: C

5.Exhibit.

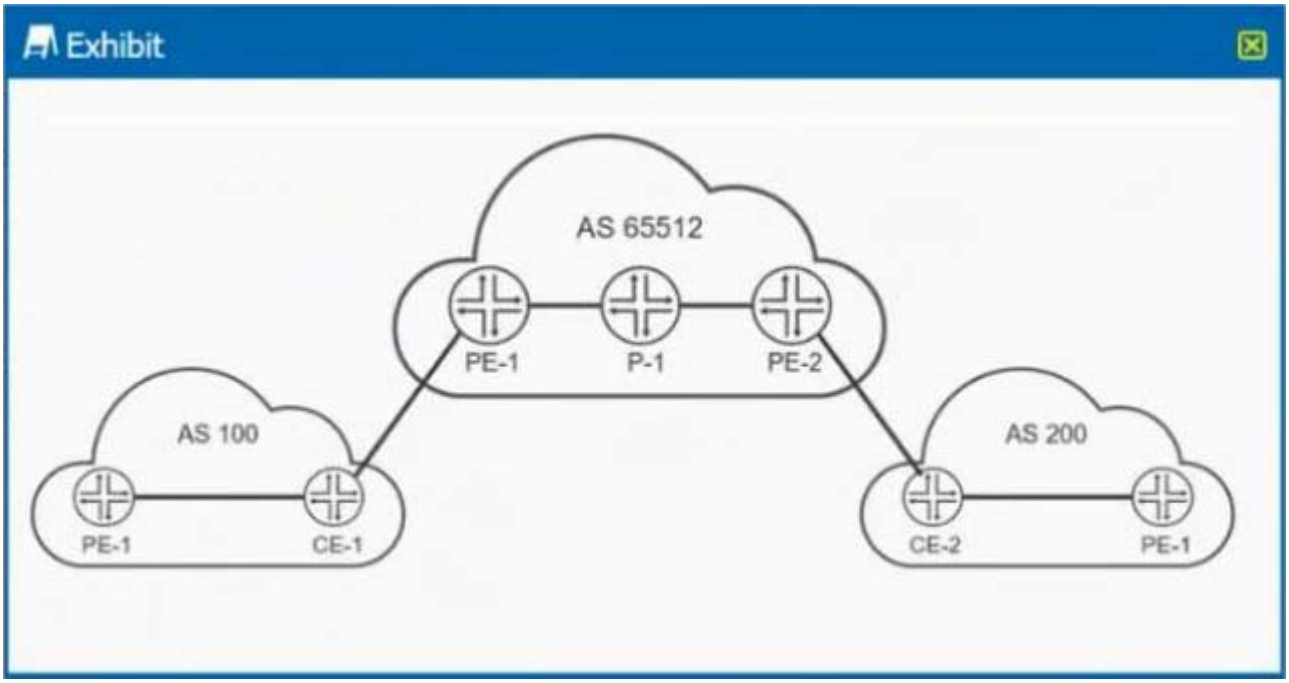

You are providing camer-of-carner VPN services for AS 100 and AS 200 You want to distribute MPLS labels between your PE routers and the AS 100 and AS 200 CE routers.
What must be enabled to accomplish this task?
A. Use BGP with the labeled-unicast address family enabled
B. Use RSVP with the tunnel-services parameter enabled
C. Use BGP with the inet-vpn address family enabled
D. Use RSVP with the lsp-set parameter enabled
Answer: C