Testpassport Q&A

La meilleure qualité le meilleur service

http://www.testpassport.fr

Service de mise à jour gratuit pendant un an

Exam : **NS0-310**

Title : Network Appliance Solution Architect-Backup and Restore

Version : Demo

1. In which of the two following instances does VTL helps in performance versus tape?

A. Streaming multiple streams

B. Slow Data Networks

C. Millions of small files

D. Small number of large files
Answer:AB

2. Which one of the following OSSV clients are integrated with SnapManager for Exchange?

A. SyncSort Backup Express

B. CommVault QiNetix

C. Bakbone NetVault

D. None of the above
Answer: D

3. Which one of the following is NOT controlled by SnapManager for Exchange?

A. SnapMirror

B. Snapshots

C. SnapRestore

D. VSS Snapshots for NetApp OSSV
Answer: D

4. Customer wants to backup non-NetApp storage using NetBackup. They want easy online access to long history of backups. Which one of the disk-based NetApp solution should be proposed?

A. VTL

B. SnapVault for NetBackup

C. NDMP

D. OSSV
Answer: B

5. A destination volume for backups and data retention is known as a _____?

A. Vault

B. Secondary Volume C. Mirror plex

D. Cluster
Answer: B

6. Looking at the diagram below, which one of the following is the supported configuration?

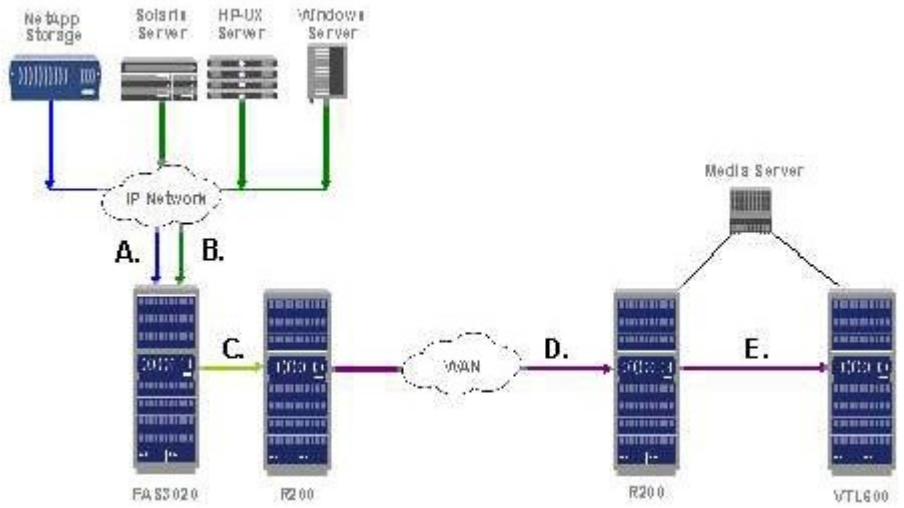

A. (A) SnapVault, (B) OSSV. (C) SnapVault, (D) Async SnapMirror, (E) NDMP

B. (A) SnapVault, (B) SnapVault. (C) SnapMirror, (D) SnapMirror, (E) NDMP

C. (A) NDMP, (B) SnapVault. (C) SnapMirror, (D) SnapMirror, (E) NDMP

D. (A) SnapVault, (B) OSSV. (C) SnapMirror, (D) SnapMirror, (E) NDMP
Answer: D

7. A customer wants to deploy DFM into an existing SnapVault environment to manage the SnapVault backup schedules. What will occur?

A. DFM will Auto discover all existing SnapVault schedules

B. The command line schedules will be automatically ignored

C. Newly created DFM schedules will take precedence over command line schedules

D. Both schedulers will continue to run independently
Answer: D

8. What OSSV command could you use to measure the network throughput on an OSSV primary?

A. snapvault status

B. ossv status

C. snapvault perf

D. ossv perf
Answer:A

9. Which backup mechanism is most closely tied to snapshots?

A. VolCopy

B. SnapLock

C. SnapVault

D. NDMP
Answer: C

10. What are the two key components of SnapVault for NetBackup?

A. NearStore option license

B. FAS 980

C. NetBackup Enterprise 6.0 MP3 or later

D. NetBackup 5.0 or later
Answer:AC

11. Which methodology CANNOT be used to allow for a single file restore from tape to a NetApp FAS system?

A. SnapMirror to tape

B. NetBackup with NDMP

C. NetBackup without NDMP

D. The dump command
Answer:A

12. Where is SnapVault snapshot scheduling controlled?

A. Primary

B. Secondary

C. Primary and Secondary

D. FilerView
Answer: C

13. What is the maximum number of simultaneous SV/OSSV streams allowed to/from the FAS270?

A. 4

B. 8

C. 16

D. 128
Answer: B

14. Which three of the following tools can be used to manage OSSV?

A. Legato NetWorker.

B. BakBone NetVault.

C. CommVault QiNetix

D. Syncsort Backup Express
Answer: BCD

15. A customer with OSSV has used the SnapVault/SnapMirror bundle to convert their OSSV destination to R/W for testing. The testing was a success and they would like to copy their changes back to the OSSV primary. How can this be done?

A. OSSV resync

B. FTP

C. SnapMirror resync

D. None of the above
Answer: D

16. A customer wants to use SnapVault to backup snapshots from a traditional volume. Which one of the following will impact SnapVault performance?

A. Application running on the host

B. Number of disks in the destination's Root Volume

C. Volume type on the destination

D. Frequency of SnapVault transfers
Answer: D

17. Customer wants to do a nightly backup that is locked down for compliance purposes. Which product will you use?

A. SnapLock

B. SnapMirror

C. SnapVault

D. LockVault
Answer: D

18. A customer has backed up a SnapVault volume on a SnapVault secondary to tape. The steps to recover data from tape to the SnapVault primary will be:

A. Tape->secondary volume->primary volume

B. Tape->primary volume

C. Tape-> LREP-> primary volume

D. BothA and B
Answer: D

19. A customer has an Oracle Database with a RTO of 1 hour, but a RPO of 5 minutes. How can they achieve this with minimal WAN traffic?

A. SnapVault every 5 minutes

B. SnapMirror Every 5 minutes

C. SnapVault the Database files every hour and SnapMirror the logs every 5 minutes

D. Use Rman to backup to tape every hour
Answer: C

20. How can you make a SnapVault destination volume read-write?

A. SnapVault break

B. SnapMirror/SnapVault bundle

C. Cannot do it

D. SnapVault destinations are already read-write
Answer: B